Surface Directional Track
12V or 24V Remote Step Down Transformer

SDT-835-PAR8

Vertical Round Track Fixture - 7W,14W/17W, LED

Project Name:		Type:	
Catalog Number:		Date:	

Patent No.: US 10,208,928 B1

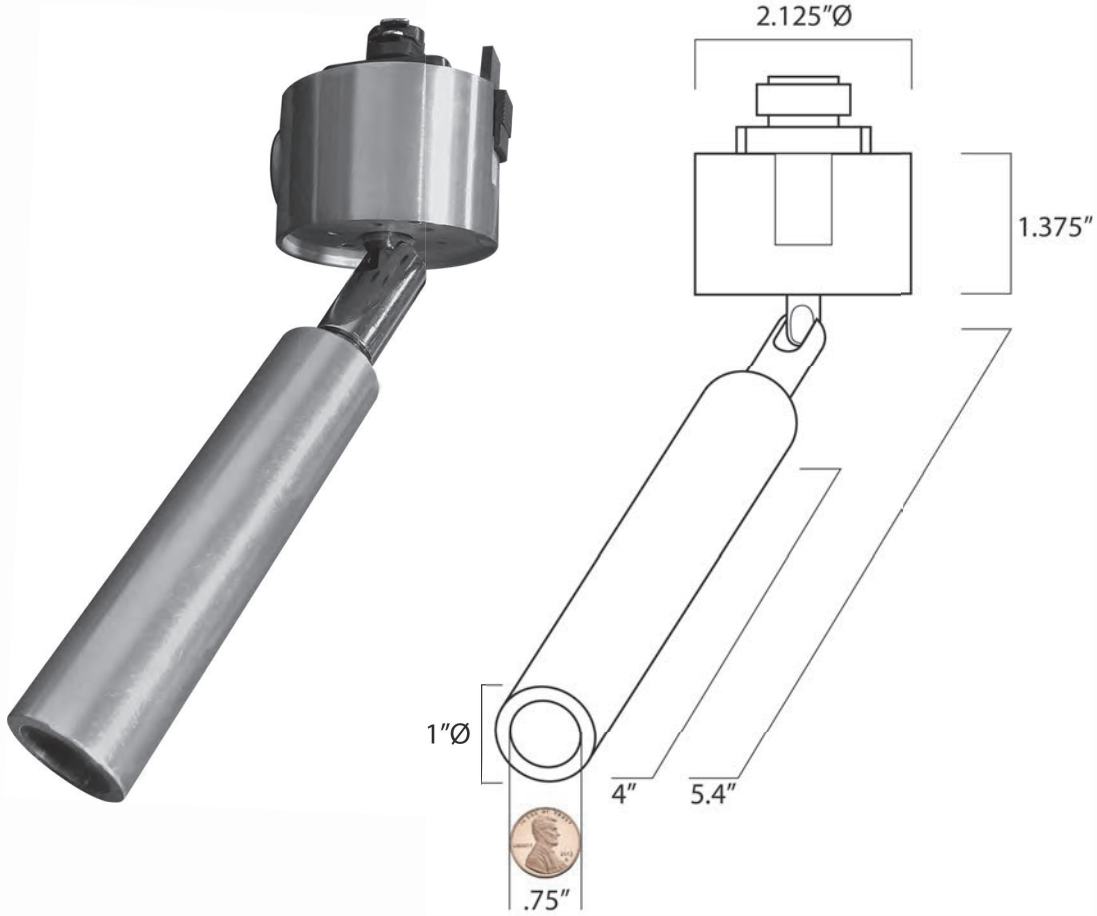

*Sizes may vary depending on wattages

Fixture Light Aiming

-Ballast fixture rotation of over 360˚ horizontally
-Optic and Lamp rotation of 180˚ vertically

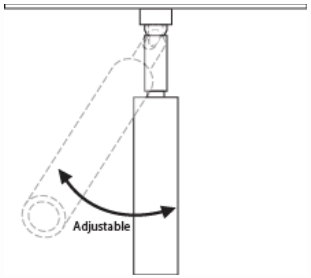

Flat Canopy Plate

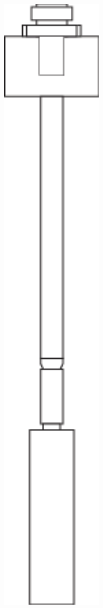

Stem Option

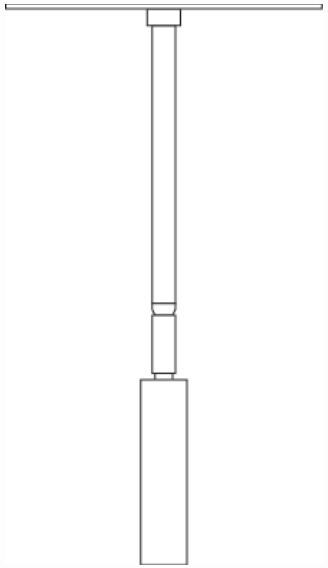

Canopy Plate with Stem Option

Stem available in 6", 12", and 18".
*Custom sizes available upon request.
****Overall fixture height cannot exceed 10" with HALO compatible track adapter!**

CLARTÉ™ LIGHTING

Made in the USA!

CREE LEDs

975 N. Todd Ave, Azusa, CA 91702 Tel No. (626)261-4242 Fax No. (626)598-3750

Surface Directional Track
12V or 24V Remote Step Down Transformer

SDT-835-PAR8

Vertical Round Track Fixture - 7W,14W/17W, LED

Project Name:		Type:	
Catalog Number:		Date:	

Wattage/Lumen Output - PAR8 Scale

450 Lumens - 350 Milliamp

7W MLV <1% Dimming

900 Lumens - 700 Milliamp

14W MLV <1% Dimming

1100 Lumens - 1050 Milliamp

17W MLV <1% Dimming

*Size subject to change

Photometrics

PAR8
11W - ON/OFF
14W - MLV Dimming
670 LUMENS

PAR8
11W - ON/OFF
14W - MLV Dimming
900 LUMENS

2′	559 fc	0.9′	402 fc	1.5′	2′
4′	140 fc	1.9′	101 fc	2.9′	4′
6′	62 fc	2.8′	45 fc	4.4′	6′
8′	35 fc	3.7′	25 fc	5.9′	8′
10′	22 fc	4.7′	16 fc	7.4′	10′
12′	16 fc	5.6′	11 fc	8.8′	12′
	NFL 26°		FL 40°		

PAR8
15W - ON/OFF
17W - MLV Dimming
838 LUMENS

PAR8
15W - ON/OFF
17W - MLV Dimming
1125 LUMENS

2′	699 fc	1.1′	503 fc	1.9′	2′
4′	175 fc	2.4′	126 fc	3.6′	4′
6′	78 fc	3.5′	56 fc	5.5′	6′
8′	44 fc	4.6′	31 fc	7.4′	8′
10′	28 fc	5.9′	20 fc	9.3′	10′
12′	20 fc	7′	14 fc	11′	12′
	NFL 26°		FL 40°		

LM70 - LED Life Rating = 70% of lumen rating of LED

12W/14W = 183,000 hrs. = 20+ years*

16W/19W = 123,000 hrs. = 14+ years*

*24 hr. 7 days a week, 8760 hrs. a year operation

10 Points of Light 7 YEAR Clarté Warranty

Clarté Lighting's LED fixtures operate -30°C to -44°C cooler at junction temperature as compared to most other LED fixture manufacturers, creating a premium life LED, allowing Clarté to offer a 7 year warranty*. *5 year on DMX/RGBW fixtures.

Optical & Accessory Options:

- Up to 3 Stackable accessories per optic
- 1 rentention ring for optic + 1 rentention ring for accessories
- Easy tool less field changable optic and /or accessories

Optical Features

1. 3 to 1 min to max beam ratio with strong center beam CP
2. Soft feathered beam edge
3. 45 degree vertical cut off eliminated glare
4. 180 degree soft radiant fill light improves min to max ratio

4 field changeable optics - LED

NARROW FLOOD (NFL)	26°
FLOOD (FL)	40°

Lens Softener (LS) +20 increases in beam width Shields optical face visually Softens edges of beam.

Linear Spread Lens (LSL) Horizontal or Vertical Beam Elongation.

Wide Flood Lens (WFL) Wall Washing Increases the beam by 50% width with elimination of center beam.

Cross Hair **Louver (CHV)** Small black Cross Hair Louver, eliminates all surface brightness. Creates stronger vertical cut off with -20% beam width.

Halogen (H) 150 Kelvin lower - 2700K to 2550K

Dichroic Color Filters Themed environment Red Green, Blue, Yellow & Amber.

Ordering Information:

Please fill in the spaces below that apply

SDT-835 ____-____-____ -PAR8- ____-____-____-____-____-____
(a) (b) (c) (d) (e) (f) (g) (h) (i)

(a) Driver Options

D = Forward Phase Magnetic Low Voltage (MLV) <1% Dim to Off (2 wire)

(b) Wattage Options

7W = MLV <1% dimming
14W = MLV <1% dimming
17W = MLV <1% dimming

(c) Lamp Type Options

X4LED = Cree XHP50 LED = 50+% brighter than XLED (available spot, narrow flood and flood)

(d) Beam Options

SP = Coming Soon!
NFL = Narrow Flood
FL = Flood

(e) Element Options

LS = Lens Softener
LSL = Linear Spread Lens
WFL = Wide Flood Lens
DH = Dimmed Halogen (300K lower)
H = Halogen (150K lower)
CHL = Cross Hair Louver

(f) Snoot Color Options

BLKS = Black Snoot
WHTS = White Snoot
PWTS = Pewter Snoot

(g) Options

RMT60 = 60 watt 12V AC MLV Step down transformer
RMT150 = 150 watt 12V AC MLV Step down transformer
RMT300 = 300 watt 12V AC MLV Step down transformer
12V = Up to 6 Fixtures - Add 12V AC magnetic step down transformer to operate track
24V = Up to 10 Fixtures - Add 24V AC magnetic step down transformer to operate track
120V = 120VAC 60Hz (Standard)
230V = 230VAC 50Hz
277V = 277VAC 60Hz
347V = 347VAC 60Hz
80+ = CRI over 80
90+ = CRI over 90 (only available in 27K and 30K)

(h) Stem Options

S6 = Stem Size 6"
S12 = Stem Size 12"
S18 = Stem Size 18"
CS = Custom Stem

(i) Color Temperature Options

22K = 2200 Kelvin (candlelight)*
27K = 2700 Kelvin (incandescent color)
30K = 3000 Kelvin (Halogen color)
35K = 3500 Kelvin (warm incandescent)
40K = 4000 Kelvin (cool incandescent)
RGBW = Red, Green, Blue, White**
*Must utilize 1000/1050 mA or below
**Must utilize DMX fixture option

UV365 = 365 NM UV black light
UV390 = 390 NM UV black light
Blue = 465 - 485 NM wavelength
Green = 520 - 535 NM wavelength
Amber = 585 - 595 NM wavelength
Red = 620 - 630 NM wavelength

CLARTÉ™ LIGHTING

Made in the USA!

CREE LEDs

975 N. Todd Ave, Azusa, CA 91702 Tel No. (626)261-4242 Fax No. (626)598-3750