SMS2-201-PAR16-ADJ

2-Lamp Adjustable

Project Name:		Type:	
Catalog Number:		Date:	

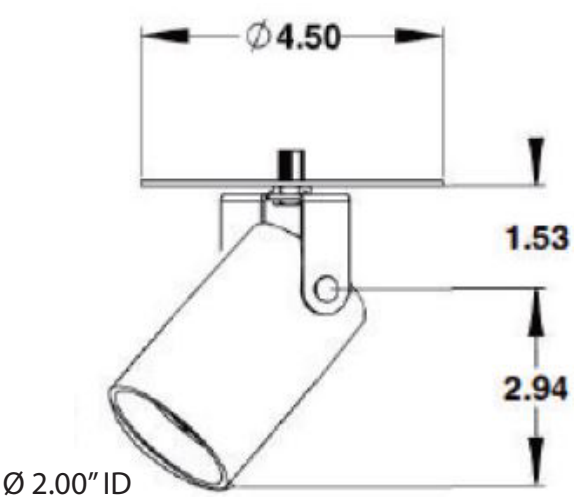

Ø 2.00″ ID
Ø 2.25″ OD

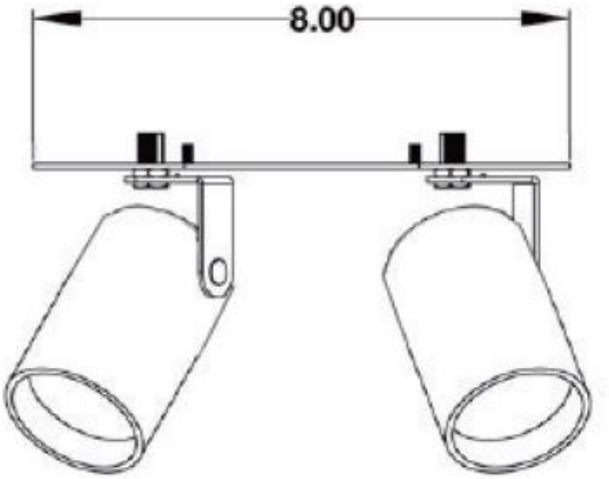

1″ Regress

Key Features

- 2.25” OD
- Up to 4 accessories
- Remote transformer optoin
- Over 10,000+ fixture custom color finish options
- 100,0000+ hr L70 life
- **See Page 3 for additional mounting options**

LED Source Details

CREE XPL LED maximum rating = 3,000mA

- Fixture operating milliamp range = 450mA to 1150mA.
- Operating 15% to 38% of rated value
- Fixture wattage range = 8W to 20W
- Fixture delivered lumens = 700 to 1,300 lumens

© Clarté Lighting - All Rights Reserved. Specifications Subject to Change Without Notice.
750 W Golden Grove Way, Covina, CA 91702 / t: (626) 261-4242 / f: (626) 598-3750 / clartelighting.com

Clarté Lighting

SMS2-201-PAR16-ADJ

2-Lamp Adjustable

Ordering

Project Name:		Type:	
Catalog Number:		Date:	

	(a) Driver	(b) Wattage	(c) LED		(d) Beam	(e) Accessories	(f) Color	(g) Trim	(h) Mounting	(i) Options	(j) Chromaticity
SMS2-201-				-PAR16-ADJ-							

SurfaceMount Square 2Lamp

(a) Driver Options

E	=	ON/OFF (Electronic)
D*	=	MLV 1% Dimming (2 wire)
DC12V	=	.01% PWM DC dimming (2 wire)
DC24V	=	.01% PWM DC dimming (2 wire)
ED	=	Electronic Reverse Phase Dimming 1% (2 wire)
0-10V**	=	Remote mount 4 wire 0-10V LED driver single fixture
0-10V 2	=	Remote mount 4 wire 0-10V driver for up to 2 fixtures
0-10V 3	=	Remote mount 4 wire 0-10V driver for up to 3 fixtures
0-10V 4***	=	Remote mount 4 wire 0-10V driver for up to 4 fixtures
0-10V MRI****	=	0-10V Dimming with 100bd Filter
RDM DMX	=	16 Bit, 4 Channel (2 wire with CAT5)
ABS	=	Absolute Light .001% Dimming (use with RGBW)

*MLV power supply is intended for use with forward phase SCR or Triac dimmers.
*Do not use with relays or toggle switches, do not use with reverse phase dimmers.
**Remote single 0-10V LED driver up to 18' away 18ga and 50' away 12ga
***Remote 0-10V LED driver operates up to 4 fixtures up to 18' away 18ga and 50' away 12ga
****Operates up to 4 recessed LED light fixtures for MRI room installation with remote LED driver

(b) Wattage Options

9W (520 Lumens)	=	MLV <1% Dimming	Can be used with Remote or In-Line 12V Transformer
14W (800 Lumens)	=	MLV <1% Dimming	
17W (1100 Lumens)	=	MLV <1% Dimming	
12W (800 Lumens)	=	ON/OFF, 0-10V 1%, ED	To be used ONLY with Remote Transformer
16W (1100 Lumens)	=	ON/OFF, 0-10V 1%, ED	
18W (900 Lumens)	=	Absolute Light RGBW	
19W (1300 Lumens)	=	DMX Dimming	
20W (1300 Lumens)	=	ON/OFF, 0-10V 1%, ED	

(c) LED Type Options

XLED = Cree XPL2 LED @ All Wattages

(d) Beam Options

NSP	= Narrow Spot	NFL	= Narrow Flood
SP	= Spot	FL	= Flood

(e) Optical and Accessory Options

LS	=	Lens Softener - +20% increase in beam width. Shields optical face visually. Softens edges of beam.
LSL	=	Linear Spread Lens - Horizontal or vertical beam elongation.
WFL	=	Wide Flood Lens - Wall washing increases the beam by 50% width with elimination of center beam.
LV	=	Louver - Hexcel louver elimniates all surface brightness. Creates stronger vertical cut off with -20% beam width.
CHL	=	Cross Hiar Louver
H	=	Halogen - 150K warmer. 2700k to 2550K
DH	=	Dimmed Halogen - 300K warmer. 2700k to 2400K

(f) Fixture Color Options

BLK	=	Black
WHT	=	White
PWT	=	Pewter

Select Custom Color (Review Website for Over 3,300 Color Options)

(g) Trim Type

T	=	Trim
LP	=	Level Plane
TL	=	Trimless

(h) Mounting Options

NC	=	New Construction
RMT	=	Remote Transformer

(i) Options

RMT60	=	14 watt 12V AC MLV Step Down Transformer
RMT60	=	60 watt 12V AC MLV Step Down Transformer
RMT150	=	150 watt 12V AC MLV Step Down Transformer
RMT300	=	300 watt 12V AC MLV Step Down Transformer
12V	=	Up to 6 Fixtures - Add 12V AC Magnetic Step Down Transformer to Operate Track
24V	=	Up to 10 Fixtures - Add 24V AC Magnetic Step Down Transformer to Operate Track
120V	=	120VAC 60Hz (Standard)
230V	=	230VAC 50Hz (Used in conjuction with 230V track)
277V	=	277VAC 60Hz (Used in conjuction with 277V track)
EMG	=	90 Minute Emergency Battery Backup
80+	=	CRI over 80
90+	=	CRI over 90
IPS	=	5/8" Threaded Rod Nipple to Mount to Unistrut or Other Flat Surfaces
DMX*	=	.39% to 100% milliamp constant voltage LED driver, dip switch addressable, 3 channel for 27K & 30K, 4 channel for RGBW, CAT5 in & out*

*DMX is required in RGBW or in any 2 circuits or more.
Custom colors available - Consult factory for more details

(j) Color Temperature Options

White LED

22K*	=	2200 Kelvin (candlelight color)
27K	=	2700 Kelvin (incandescent color)
30K	=	3000 Kelvin (halogen color)
35K	=	3500 Kelvin (warm incandescent)
40K	=	4000 Kelvin (cool incandescent)
50K	=	5000 Kelvin (day white)
65K	=	6500 Kelvin (12 noon sunlight)

*1050 mA or less

Colored/Themed LED

UV275**	=	275 NM UV virus sterilizer
UV365***	=	365 NM UV black light
UV390***	=	390 NM UV black light
Blue***	=	465 - 485 NM wavelength
Green***	=	520 - 535 NM wavelength
Amber***	=	585 - 595NM wavelength
Red***	=	620 - 630 NM wavelength
RGBW3K****	=	Red, Green, Blue, White
RGBW4K****	=	Red, Green, Blue, White

**500 mA
***700 mA
****Must utilize DMX @ 700 mA

© Clarté Lighting - All Rights Reserved. Specifications Subject to Change Without Notice.
750 W Golden Grove Way, Covina, CA 91702 / t: (626) 261-4242 / f: (626) 598-3750 / clartelighting.com

Clarté Lighting

SMS2-201-PAR16-ADJ

2-Lamp Adjustable

Specifications

Project Name:		Type:	
Catalog Number:		Date:	

New Construction

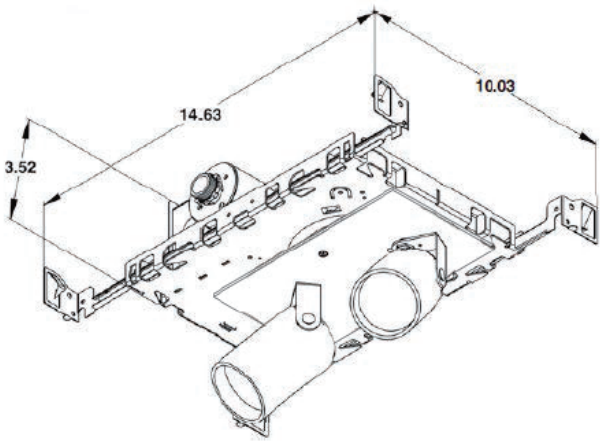

Housing
- 100% aluminum construction

Electrical
- Optional - 12V AC remote class 2
- 100V, 120V, 230V, 277V or 347V

LED
- 3,000mA maximum rated CREE XPL2 LED
- Operates between 450 to 1200mA
- 15% to 40% of rated mA

LED Driver
- D – 2 wire forward phase .01% LED driver fade to off glow to on
- ED – 2 wire reverse phase 1% LED driver
- DC – 12V or 24V

Optics
- TIR discrete injection molded polycarbonate precision LED optic
- 45-degree vertical cut off

Installation
- IPS Nipple - Unistrut (Not provided)

Certification
- UL Damp Listed – IP 52

Warranty
- 5 Year – ED, 0-10V, DMX and colored LED fixtures
- 7 Year – D and White LED fixtures

3 Trim Installation Options

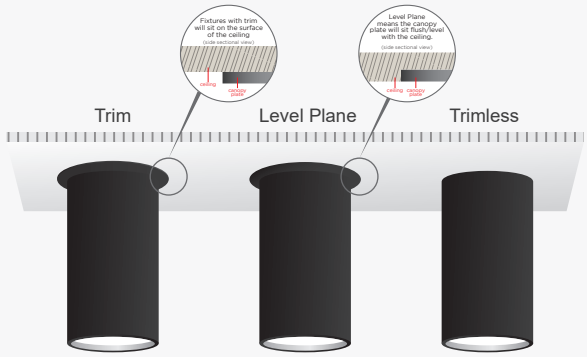

© Clarté Lighting - All Rights Reserved. Specifications Subject to Change Without Notice.
750 W Golden Grove Way, Covina, CA 91702 / t: (626) 261-4242 / f: (626) 598-3750 / clartelighting.com

Clarté Lighting

SMS2-201-PAR16-ADJ

2-Lamp Adjustable

Photometrics

Project Name:		Type:	
Catalog Number:		Date:	

Wattage & Lumen Output

450 Milliamps - 520 Lumens		700 Milliamps - 800 Lumens		1000 Milliamps - 1100 Lumens		1150 Milliamps - 1300 Lumens	
8W	ON/OFF	12W	ON/OFF	16W	ON/OFF	20W	ON/OFF
	0-10V 1% Dimming		0-10V 1% Dimming		0-10V 1% Dimming		0-10V 1% Dimming
9W	MLV <1% Dimming		ELV 10% Dimming		ELV 10% Dimming		ELV 10% Dimming
		14W	MLV <1% Dimming	17W	MLV <1% Dimming		
				19W	Lutron 1% Dimming		
					DMX .33% Dimming		

3 Step CREE XPL2 LED

Kelvin-CRI	Multiplier
27K-80+ CRI	1
27K-90+ CRI	0.80
30K-80+ CRI	1
30K-90+ CRI	0.85
35K-80+ CRI	105
35K-90+ CRI	0.9
40K-80+ CRI	109
50K-80+ CRI	109
65K-80+ CRI	105

80+ = 84 CRI
90+ = 94 CRI

Narrow Spot 12°

2’	3,824 fc	0.4’
4’	956 fc	0.9’
6’	425 fc	1.3’
8’	239 fc	1.8’
10’	153 fc	2.2’
12’	106 fc	2.7’
20’	28 fc	5.2’
26’	16 fc	7.0’
33’	10 fc	8.7’
40’	7 fc	10.5’

20W PAR16 - 1,100 lm
15,296 CBCP

Spot 19°

2’	1,939 fc	0.7’
4’	485 fc	1.4’
6’	215 fc	2.0’
8’	121 fc	2.7’
10’	78 fc	3.4’
12’	54 fc	4.1’
20’	28 fc	6.1’
26’	16 fc	8.1’
33’	10 fc	10.1’
40’	7 fc	12.1’

20W PAR16 - 1,313 lm
7,757 CBCP

Narrow Flood 24°

2’	1,705 fc	0.7’
4’	426 fc	1.4’
6’	189 fc	2.1‘
8’	107 fc	2.8’
10’	68 fc	3.5’
12’	47 fc	4.3’
20’	17 fc	7.5’
26’	10 fc	10.0’
33’	6 fc	12.4’
40’	5 fc	14.9’

20W PAR16 - 1,306 lm
5,478 CBCP

Intensity Summary (cd)

Gamma	All Planes	Flux (lm)
0	15296	
5	9739	696
10	2978	
15	676	236
20	229	
25	135	64
30	90	
35	67	43
40	53	
45	46	35
50	34	
55	23	21
60	15	
65	2	4
70	1	
75	0	0
80	0	
85	0	0
90	0	

Intensity Summary (cd)

Gamma	All Planes	Flux (lm)
0	7757	
5	6432	519
10	3640	
15	1648	475
20	731	
25	336	166
30	176	
35	110	71
40	77	
45	67	50
50	47	
55	29	26
60	15	
65	3	5
70	1	
75	0	1
80	0	
85	0	0
90	0	

Intensity Summary (cd)

Gamma	All Planes	Flux (lm)
0	5478	
5	4774	404
10	3229	
15	1800	500
20	905	
25	452	219
30	244	
35	146	95
40	98	
45	75	57
50	47	
55	25	25
60	15	
65	3	5
70	1	
75	1	1
80	0	
85	0	0
90	0	

Zonal Flux and Percentages

Zone	Flux (lm)	%Luminaire
0-30	997	90.6
0-40	1040	94.6
0-60	1096	99.6
0-90	1100	100.0
40-90	60	5.4
60-90	4	0.4
90-180	0	0.0
0-180	1100	100.0

Zonal Flux and Percentages

Zone	Flux (lm)	%Luminaire
0-30	1160	88.3
0-40	1231	93.8
0-60	1308	99.6
0-90	1313	100.0
40-90	82	6.2
60-90	5	0.4
90-180	0	0.0
0-180	1313	100.0

Zonal Flux and Percentages

Zone	Flux (lm)	%Luminaire
0-30	1123	86.0
0-40	1219	93.3
0-60	1301	99.6
0-90	1306	100.0
40-90	88	6.7
60-90	6	0.4
90-180	0	0.0
0-180	1306	100.0

All planes - Solid (cd)

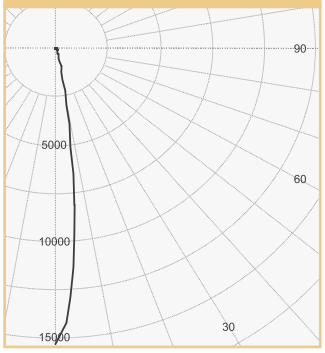

(Rotational Symmetry)

All planes - Solid (cd)

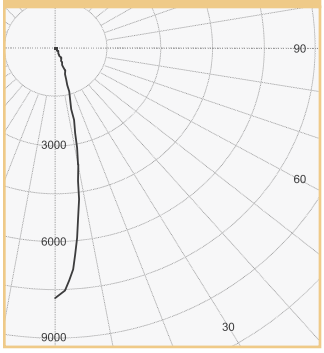

(Rotational Symmetry)

All planes - Solid (cd)

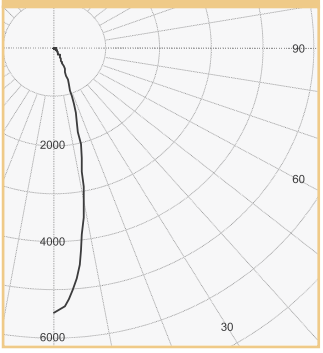

(Rotational Symmetry)

© Clarté Lighting - All Rights Reserved. Specifications Subject to Change Without Notice.
750 W Golden Grove Way, Covina, CA 91702 / t: (626) 261-4242 / f: (626) 598-3750 / clartelighting.com

Clarté Lighting

SMS2-201-PAR16-ADJ

2-Lamp Adjustable

TM-30-18 Color Metrics

Project Name:		Type:	
Catalog Number:		Date:	

Clarté Lighting 3000K 80+ CRI Color Metrics

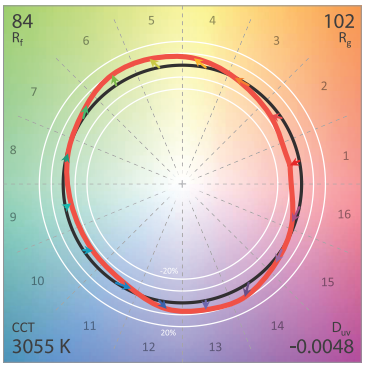

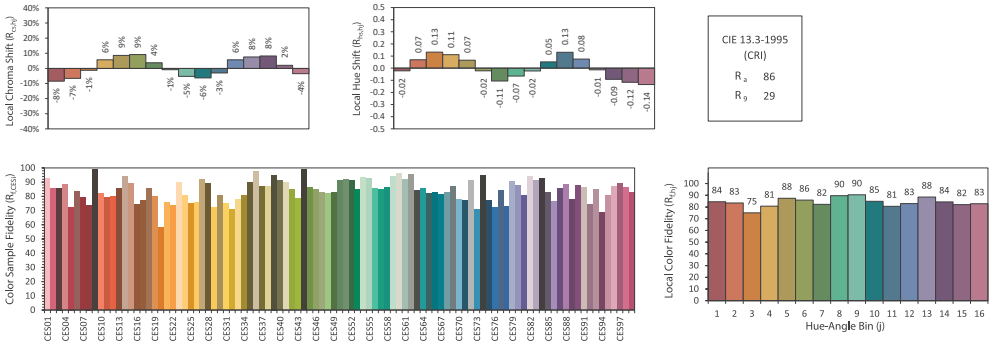

Clarté Lighting 3000K 90+ CRI Color Metrics

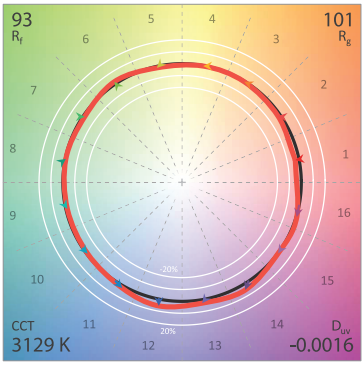

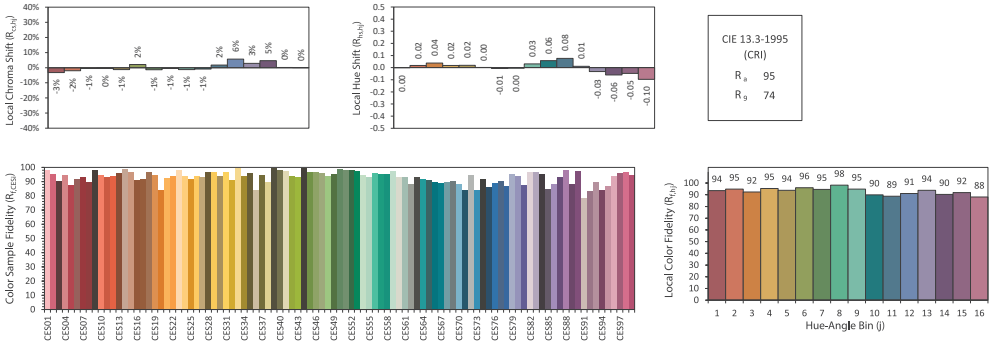

Clarté Lighting 3000K 90+ CRI Halogen Lens (H) Color Metrics

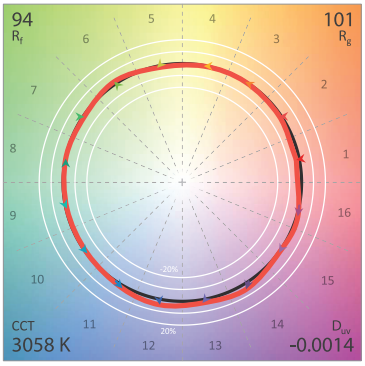

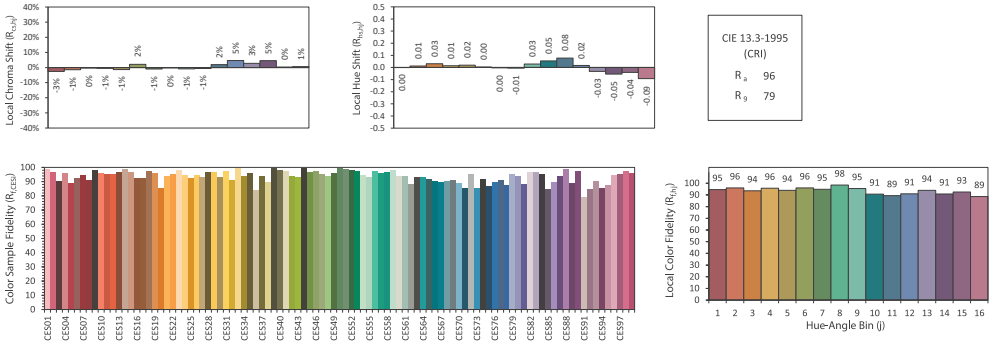

Clarté Lighting 3000K 90+ CRI Dimmed Halogen Lens (DH) Color Metrics

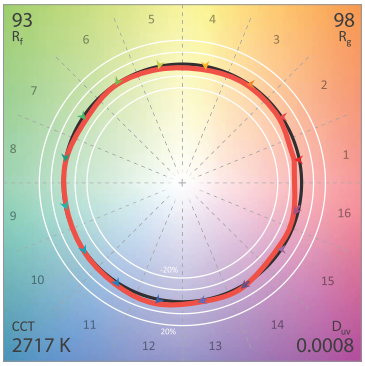

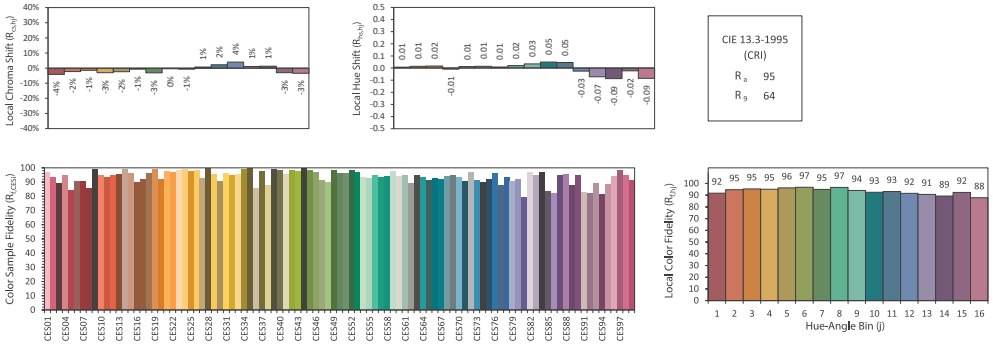

© Clarté Lighting - All Rights Reserved. Specifications Subject to Change Without Notice.
750 W Golden Grove Way, Covina, CA 91702 / t: (626) 261-4242 / f: (626) 598-3750 / clartelighting.com